Technical sheet :

MT 1335 HA 100D ST5

MANITOU
HANDLING YOUR WORLD

Capacities		Metric
Max. capacity	Q	3500 kg
Max. lifting height		12.60 m
Max. outreach		8.65 m
Breakout force with bucket		7400 daN
Weight and dimensions		
Overall length to carriage	l11	5.72 m
Overall length (with forks)	l1	6.92 m
Overall width	b1	2.28 m
Overall height	h17	2.48 m
Wheelbase	y	2.80 m
Ground clearance	m4	0.42 m
Overall cab width	b4	0.95 m
Tilt-up angle	a4	13 °
Tilt-down angle	a5	114 °
External turning radius (over tyres)	Wa1	3.78 m
Overall weight		9470 kg
Tires type		Inflatable
Standard tires		Alliance 400/80 - 24 - 162A8
Forks length / width / section	l / e / s	1200 mm x 100 mm x 50 mm
Performances		
Lifting		10.30 s
Lowering		9.60 s
Extension		14.70 s
Retraction		9.90 s
Crowd		3.20 s
Dump		3.80 s
Engine		
Engine brand		Deutz
Engine norm		Stage V
Engine model		TCD 3.6L
Number of cylinders / Capacity of cylinders		4 - 3621 cm³
Engine power (Hp/kW)		100 Hp / 74.40 kW
Max. torque / Engine rotation		410 Nm @ 1600 rpm
Drawbar pull (Laden)		6900 daN
HVO validated (according to EN 15940 standard)		Yes
Engine/Battery		
12V Battery capacity		180 Ah
Transmission		
Transmission type		Hydrostatic
Number of gears (forward / reverse)		2 / 2
Max. travel speed		24.90 km/h
Parking brake		Automatic parking brake
Service brake		Hydraulic servo brake
Hydraulics		
Hydraulic pump type		Axial piston
Hydraulic Pressure		270 bar
Tank capacities		
Engine oil		8.50 l
Hydraulic oil		153 l
Fuel tank capacity		137 l
Noise and vibration		
Noise at driving position (LpA)		77 dB
Noise to environment (LwA)		104 dB
Vibration on hands/arms		< 2.50 m/s²
Miscellaneous		
Steering wheels (front / rear)		2 / 2
Drive wheels (front / rear)		2 / 2
Safety / Cab certification		Standard EN 15000 / Cabin ROPS - FOPS level 2
Controls		JSM

MT 1335 HA 100D ST5 - Dimensional drawing

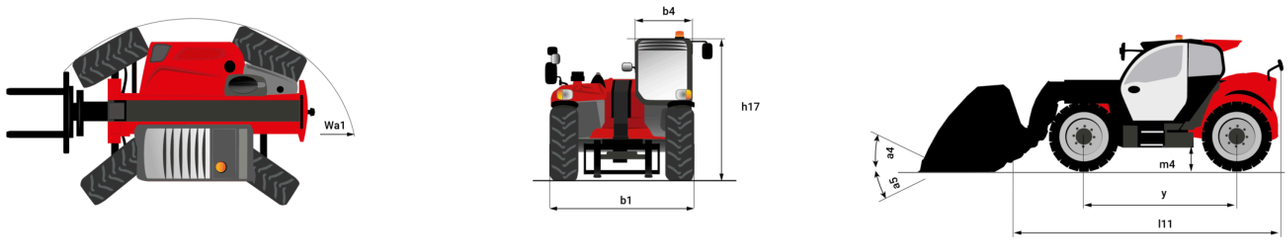

MT 1335 HA 100D ST5 - Load chart

Machine on tires with forks Metric

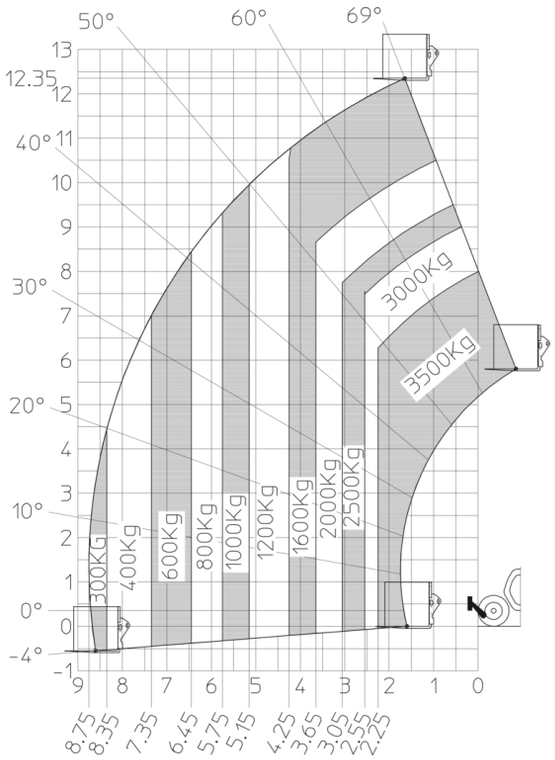

Machine on lowered stabilisers with forks Metric

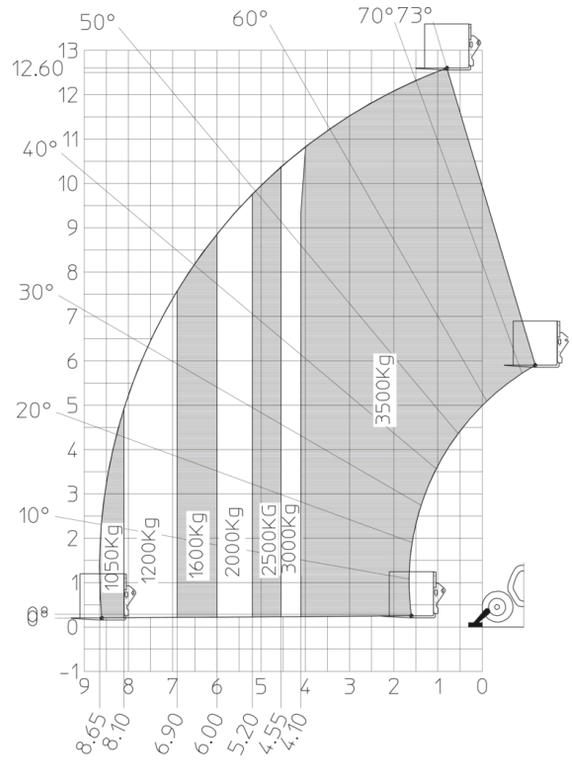

Machine with Man basket - Metric

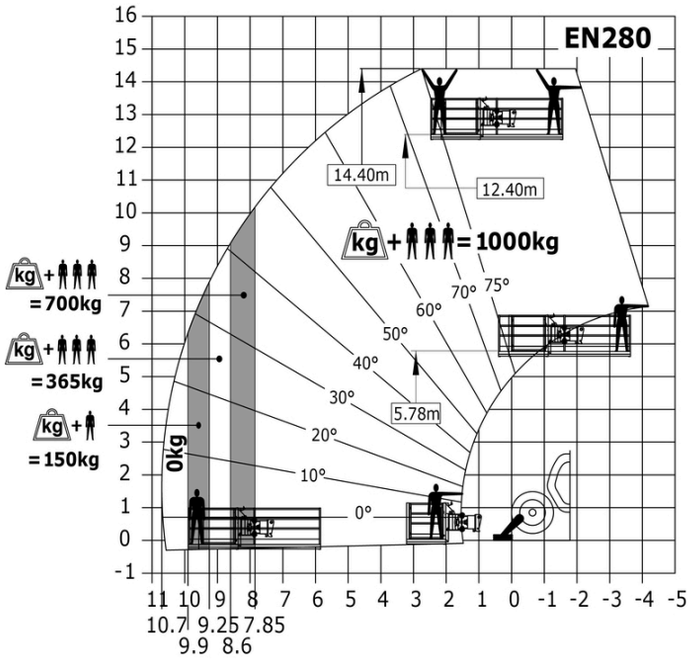

MANITOU
HANDLING YOUR WORLD

Head Office
B.P. 249 - 430 rue de l'Aubinière
44150 Ancenis Cedex - France
Tel: +33 (0)2 40 09 10 11 - Fax: +33 (0)2 40 09 10 97
www.manitou.com

This publication provides a description of the configuration versions and options for Manitou products, which may differ for equipment. The equipment presented in this brochure may be part of a series, as an option, or it may not be available, depending on the versions. Manitou reserves the right, at any time and without notice, to amend the specifications described and represented. The specifications provided do not bind the manufacturer. For more details, please contact your Manitou agent. This is not a contractually binding document. The presentation of the products is not contractually binding. List of specifications non-exhaustive. The logos as well as the visual identity of the company are owned by Manitou and cannot be used without authorisation. All rights reserved. The photos and diagrams contained in this brochure are only provided for consultation and information purposes.
MANITOU BF SA - Limited company with board of directors - Share capital: 39,668,399 euros - 857 802 508 RCS Nantes